USB

Universal Serial Bus (USB)

- a set of interface specifications for high speed wired communication between electronics systems peripherals and devices with or without PC/computer.
- was originally developed in 1995 by many of the industry leading companies like Intel, Compaq, Microsoft, Digital, IBM, and Northern Telecom.
- major goal of USB was to define an external expansion bus to add peripherals to a PC in easy and simple manner.
- new external expansion architecture, highlights,
    1. PC host controller hardware and software
    2. Robust connectors and cable assemblies
    3. Peripheral friendly master-slave protocols
    4. Expandable through multi-port hubs.

Advantages

- USB-bus allows many peripherals to be connected using a single standardized interface socket.
- in USB environment, DIP-switches are not necessary for setting peripheral addresses and IRQs.
- low cost, expandability, auto-configuration, hot-plugging and outstanding performance.
- It also provides power to the bus, enabling many peripherals to operate without the added need for an AC power adapter.

Limitations

- **Speed:** With the introduction of USB 3.0, it is possible to achieve 5Gbits/sec. But it is still lower than Gigabit Ethernet. The FireWire 800(IEEE-1394b) is also a competitor for USB.
- **Peer to Peer Communication:** As per the USB standard, the communication takes place between the host and the peripheral. Two hosts cannot communicate directly to each other. Same is the case for a peripheral. On the other hand, interfaces like FireWire supports peripheral to peripheral communication. For overcoming this limitation, the USB introduced the concept of OTG (On The Go). The OTG device normally functions as peripheral, but it can also function as host with some limited capability when required.
- **Distance:** According to USB standards, the connecting cable can be as long as 5 meters, beyond which, USB hubs need to be used for expanding the connectivity.
- **Broadcasting:** Universal Serial Bus does not provide the broadcasting feature, only individual messages can be communicated between host and peripheral.

USB Functionality

- Power Delivery

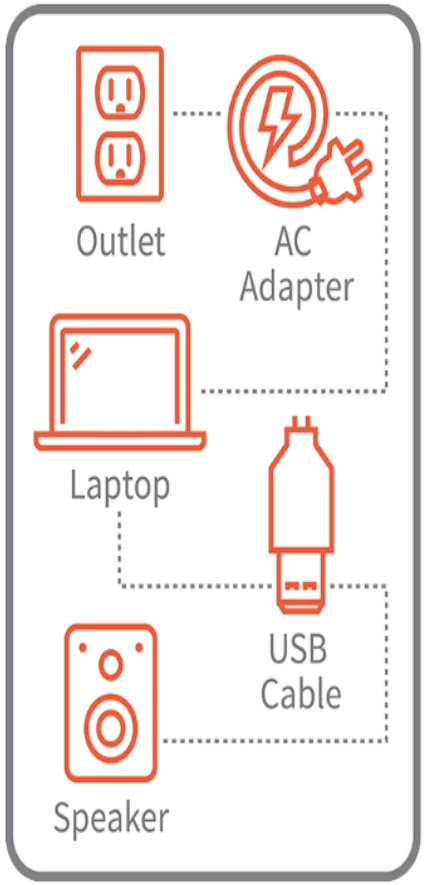

Battery powered devices can be charged through a laptop's USB port.

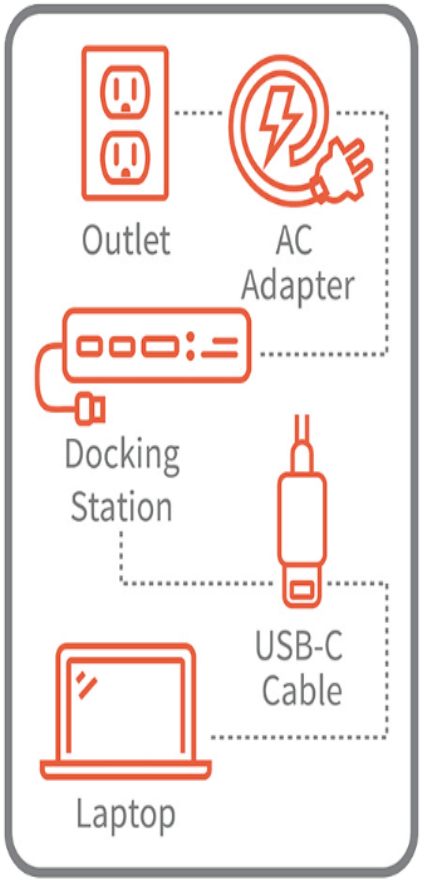

A docking station is able to power or charge a laptop, eliminating the need to plug the laptop into an AC power outlet.

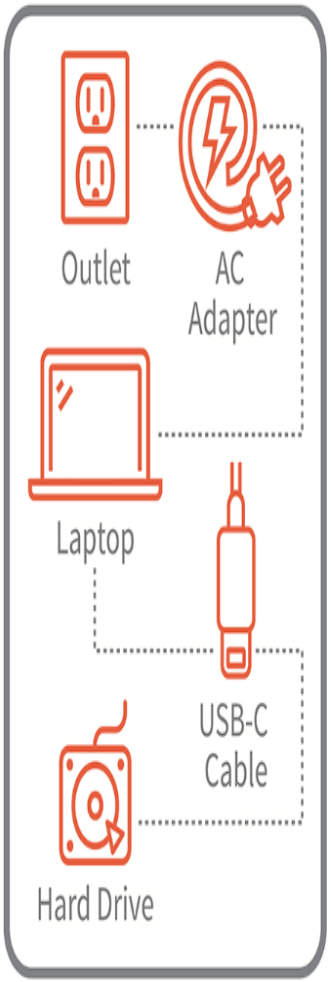

A power-hungry device, such as a hard disk drive, can be powered directly from a laptop.

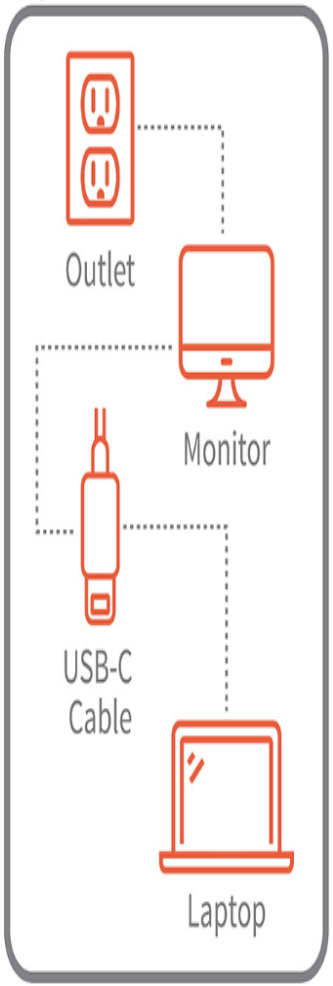

A monitor powered by a wall outlet can power or charge a laptop while displaying.

USB Functionality

- Battery Charging 1.2
- If you've ever recharged your phone from your PC's USB port, you know how useful this USB function can be. The BC 1.2 spec defines a new type of port, the charging port, that meets standards to ensure your battery will recharge safely and consistently. It also allows a device to pull more power than a standard USB port for faster charging. A normal USB 2.0 port provides up to 500mA (0.5A) and a USB 3.0 port provides up to 900mA (0.9A). A BC 1.2-compliant port provides up to 1.5A, even while transferring data. It also allows the device being charged to communicate its charging requirements to the USB charger, ensuring an optimal charge.

USB Functionality

- USB On-the-Go
- USB OTG allows mobile devices such as a smartphone or tablet to act as a host to other USB devices such as flash drives, keyboards and mice. With USB OTG, a mobile device can utilize the functionality of the peripherals while still being able to connect to a computer and present itself as a mass storage device to be used on the computer. USB OTG-compliant devices will require an OTG adapter to allow for the connection of peripherals.

OTG

- **Add a Mouse to a Tablet**A corded mouse is plugged into an OTG adapter, which plugs into the Micro USB port of this Android tablet.

OTG

- **Connect a Scanner to a Phone**Via OTG, this Walabot 3D scanner connects to the phone for power and the Walabot app. The scanner's Micro USB 3.0 jack also accepts the smaller 2.0 plugs as in this example.

USB Functionality

- DisplayPort Alt Mode
- With DisplayPort Alt Mode, USB-C connectors and cables have the ability to transmit both USB data and VGA, DVI, HDMI or DisplayPort video and/or audio. Adapters are available to connect DisplayPort over USB-C to VGA, DVI, HDMI and DisplayPort monitors. DisplayPort Alt Mode does not require the use of drivers, making it plug-and-play.
- Thunderbolt™ 3 technology supports vibrant 4K video resolution on dual DisplayPort displays simultaneously, an ideal feature for digital signage and high-performance gaming.

USB Functionality

- USB Docking
- Boost the functionality of the USB or Thunderbolt™ port on your MacBook or laptop with a portable, smartphone-sized USB docking station. The latest Thunderbolt™ 3 docks offer up to a blazing 40 Gbps bidirectional data transfer speed, ideal for quickly transferring large media files between devices. When Wi-Fi is weak or unavailable, they can provide access to a wired Ethernet network. They offer a simple way to add robust Thunderbolt™ to HDMI or Thunderbolt™ to DisplayPort functionality to a device, and support playing true 4K high-resolution video and digital audio on two large displays simultaneously.

USB Cable Types, Standards and Speeds

Standard	Also Known As	Logo	Year Introduced	Connector Types	Max. Data Transfer Speed	Cable Length**
USB 1.1	Full Speed USB		1998	USB-A USB-B	12 Mbps	3 m
USB 2.0	Hi-Speed USB		2000	USB-A USB-B USB Micro A USB Micro B USB Mini A USB Mini B USB-C*	480 Mbps	5 m
USB 3.2 Gen 1	USB 3.0 USB 3.1 Gen 1 SuperSpeed		2008 (USB 3.0) 2013 (USB 3.1)	USB-A USB-B USB Micro B USB-C*	5 Gbps	3 m
USB 3.2 Gen 2	USB 3.1 USB 3.1 Gen 2 SuperSpeed+ SuperSpeed 10Gbps		2013 (USB 3.1)	USB-A USB-B USB Micro B USB-C*	10 Gbps	3 m
USB 3.2 Gen 2x2	USB 3.2 SuperSpeed 20Gbps		2017 (USB 3.2)	USB-C*	20 Gbps	3 m
USB 4	USB4 Gen 2×2 USB4 20Gbps		2019	USB-C*	20 Gbps	0.8 m
USB 4	USB4 Gen 3×2 USB4 40Gbps		2019	USB-C*	40 Gbps	0.8 m

* USB-C is more accurately known as Type C or USB Type C

** Cable length is the length covered by the specification. Longer lengths can be achieved using active cables and in some cases, longer passive cables

Types of USB Ports and Connectors

USB Port Color Coding

- USB ports and connectors are sometimes color-coded to indicate the USB specification and features they support. These colors are not required by the USB specification and are **not consistent between equipment manufacturers**. For example, Intel uses orange to indicate a charging port, whereas a manufacturer of components for industrial equipment chose orange to indicate a USB port with a strong retention mechanism.

USB Port Color Coding

Port	Color	Type	USB Specification	Notes
	White	USB-A or USB-B Micro USB-A	USB 1.x	
	Black	USB-A or USB-B Micro USB-B	USB 2.0 Hi-Speed	
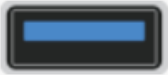	Blue	USB-A or USB-B	USB 3.0 SuperSpeed	
	Teal	USB-A or USB-B	USB 3.1 Gen 1	
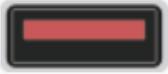	Red	Sleep-and-Charge USB-A	USB 3.1 Gen 2 USB 3.2	Usually denotes an "always on" port
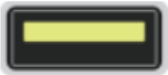	Yellow	Sleep-and-Charge USB-A	USB 2.0 or USB 3.0	Higher power or "always on" port
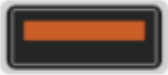	Orange	Sleep-and-Charge USB-A	USB 3.0	Charging capable Sometimes charge only

USB Connector Pinouts

- USB is a serial bus. It uses 4 shielded wires: two for power (+5v & GND) and two for differential data signals (labelled as D+ and D- in pinout). In a USB data cable Data+ and Data- signals are transmitted on a twisted pair with no termination needed. Half-duplex differential signaling is used to reduce the effects of electromagnetic noise on longer lines. D+ and D- operate together; they are not separate simplex connections.

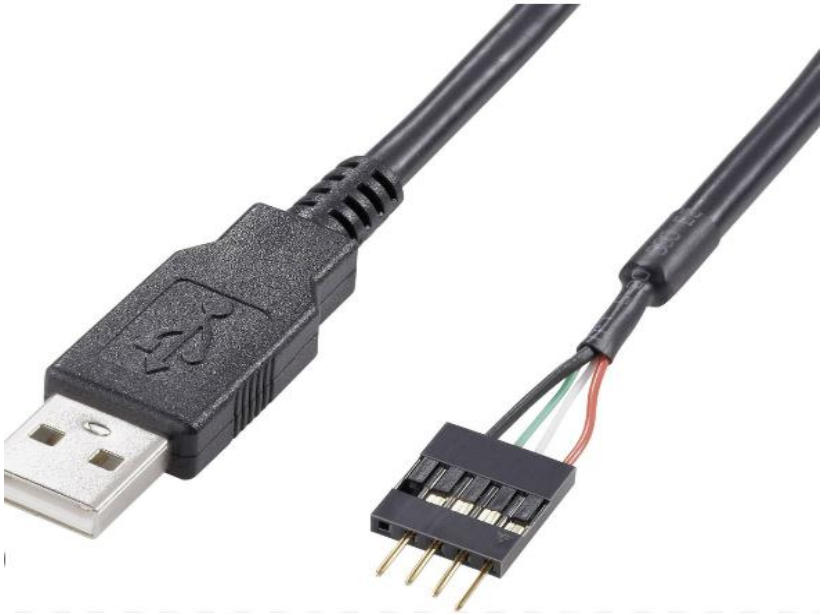

Pin No:	Signal	Color of the cable
1	+5V power	Red
2	- Data	White / Yellow
3	+Data	Green / Blue
4	Ground	Black/Brown

USB Connector Pinouts

- USB supports four data rates:
  - Low Speed (1.5 Mbit per second) that is mostly used for Human Input Devices (HID) such as keyboards, mice, joysticks and often the buttons on higher speed devices such as printers or scanners;
  - Full Speed (12 Mbit per second) which is widely supported by USB hubs.
  - Hi-Speed (480 Mbit per second) was added in USB 2.0 specification. Not all USB 2.0 devices are Hi-Speed.
  - SuperSpeed (USB 3.0) rate of 4800 Mbit/s (~572 MB/s).
- A USB device must indicate its speed by pulling either the D+ or D- line high to 3.3 volts. These pull up resistors at the device end will also be used by the host or hub to detect the presence of a device connected to its port. Without a pull up resistor, USB assumes there is nothing connected to the bus.

USB Type A and Type B pinout

Female

Male

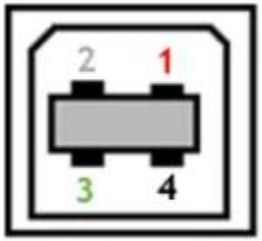

Female

Male

1 Vcc	Red	+5V
2 D-	White	Data-
3 D+	Green	Data+
4 GND	Black	Ground

www.eTechnophiles.com

Pinout of Mini B

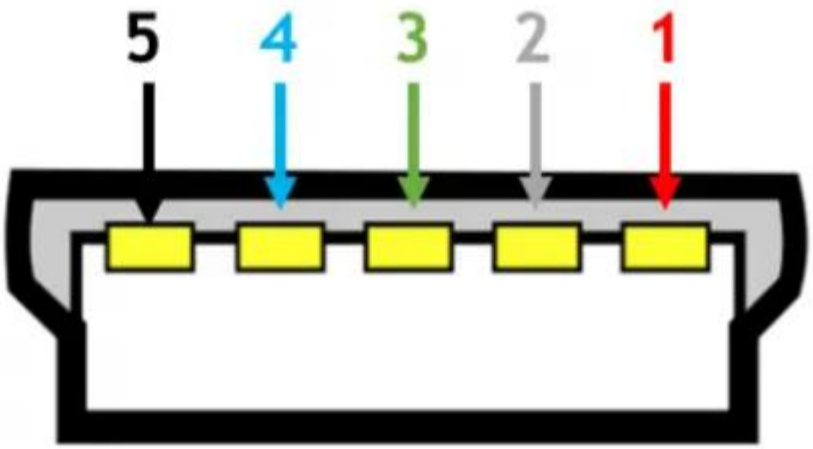

1 Vcc	Red	+5V
2 D-	White	Data-
3 D+	Green	Data+
4 ID	N/A	USB OTG ID
5 GND	Black	Ground

www.eTechnophiles.com

Micro A & Micro B pinout

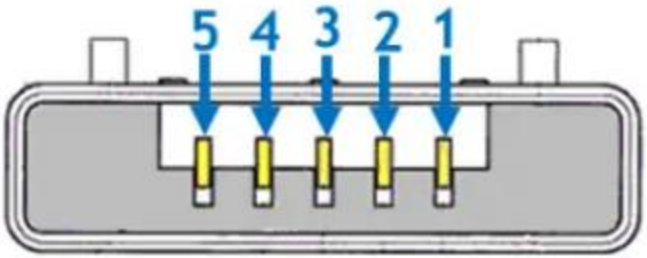

Pinout of Micro A

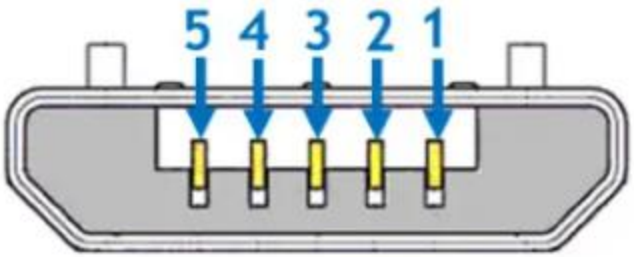

Pinout of Micro B

1 Vcc	Red	+5V
2 D-	White	Data-
3 D+	Green	Data+
4 ID	N/A	USB OTG ID
5 GND	Black	Ground

www.eTechnophiles.com

USB Standard 3

- USB Standard 3 is widely known as the SuperSpeed Mode that brought a revolution in USB manufacturing. The models used in the third generation are highly advanced, offer faster data speed, have a compact design, and are easy to handle.
- **Features of USB standard 3**
- The Standard 3 models are accepted globally due to the following benefits:
  - It is capable to transfer data with a speed of 5Gbps and above.
  - Since separate unidirectional paths are used to transmit and receive data, therefore it has larger bandwidth.
  - With predefined power management states, it offers better power management.
  - It allows the devices to notify about the data transfer, thereby improving the bus usage.
  - Standard 3 connectors come in the same physical configuration but with an additional 5 pins to handle these advancements. It includes additional ground and dedicated pins for transmission and reception which are called super speed connections.

USB Type A 3.0 and Type B 3.0

the normal Type A and Type B connectors have 4 pins. But the superspeed versions of Standard 3 have 9 pins which are visible in the figure below.

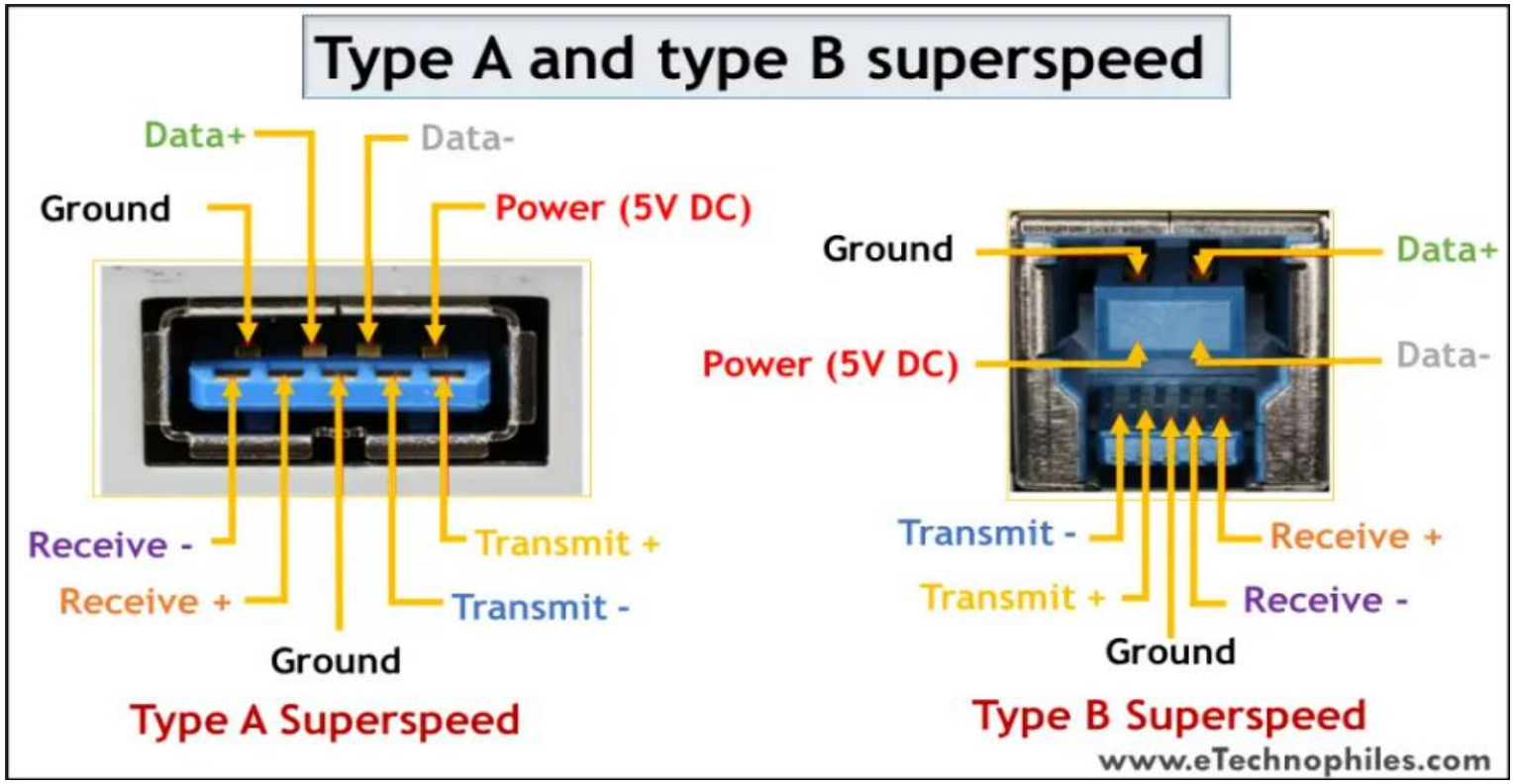

Superspeed version of Micro USB

- The superspeed version of Micro USB was introduced to Type B. Apart from the existing structure, the five additional pins are placed as an extension. Thus, it has a wider structure.

Micro B Superspeed

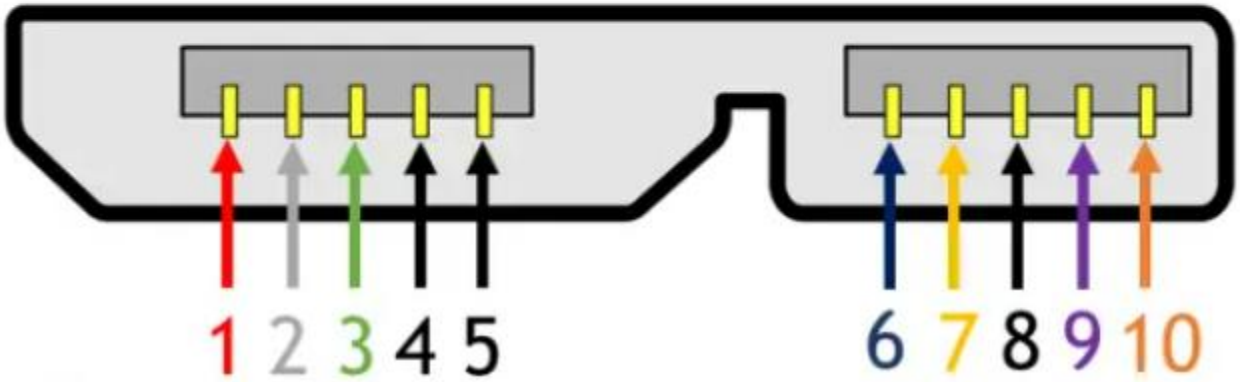

1	Red	Vcc	+5 DC
2	White	D-	Data -
3	Green	D+	Data +
4	N/A	ID	OTG ID
5	Black	GND	Ground
6	Blue	StdB_SSRX-	Superspeed Transmit-
7	Yellow	StdB_SSRX+	Superspeed Transmit+
8	N/A	GND_Drain	Ground Signal Return
9	Purple	StdB_SSTX-	Superspeed Receive-
10	Orange	StdB_SSTX+	Superspeed Receive+

www.eTechnophiles.com

USB Type C 3.0

- Type C has been the game-changer among all the USB types. It supports data transmission as well as power delivery. And thus, it has become a universal connector for modern devices.

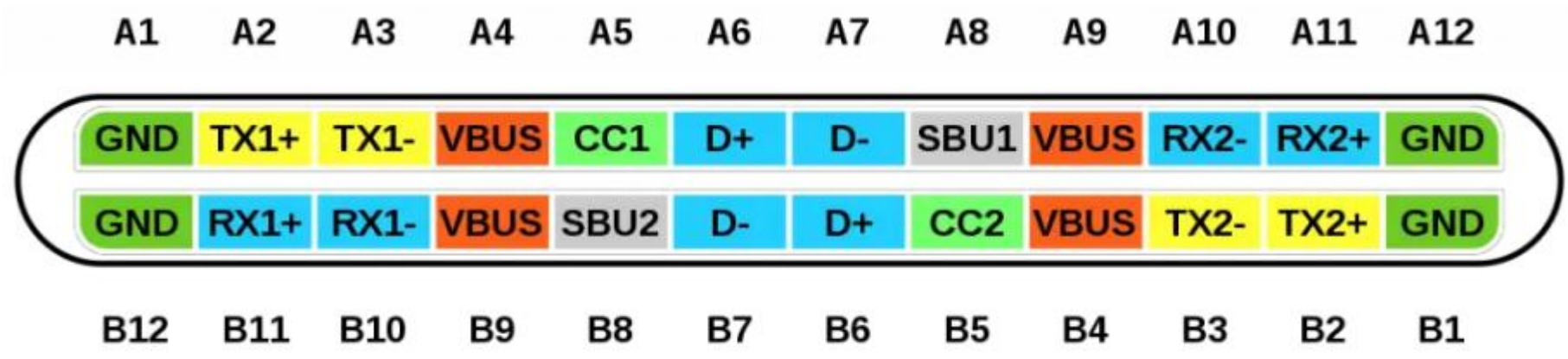

USB C 3.0 pinout

USB Type C 3.0

- The major attraction of Type C USB is that it is flippable.
- The pin connections at the top and bottom are similar so we don’t have to bother to insert the connector in the correct direction.
- It has an incredible data transfer speed of up to 5Gbps and is capable to replace Ethernet ports to achieve higher data rates.

Pin	Description	Pin	Description
A1	Ground	B12	Ground
A2	Superspeed differential pair 1, TX, positive	B11	Superspeed differential pair 2, RX, positive
A3	Superspeed differential pair 1, TX, negative	B10	Superspeed differential pair 2, RX, negative
A4	Bus power	B9	Bus power
A5	Configuration channel	B8	Side Band Use (SBU)
A6	Differential pair 1, positive	B7	Differential pair 2, negative
A7	Differential pair 1, negative	B6	Differential pair 2, positive
A8	Side Band Use (SBU)	B5	Configuration channel
A9	Bus power	B4	Bus power
A10	Superspeed differential pair 4, RX, negative	B3	Superspeed differential pair 3, TX, negative
A11	Superspeed differential pair 4, RX, positive	B2	Superspeed differential pair 3, TX, positive
A12	Ground	B1	Ground

USB Specification with 80 Gbps is also available now

Specification	Signaling Rate/Lane	Number of Lanes	Aggregate Bandwidth
USB 3.2 Gen 1×1	5 Gbps (SuperSpeed)	1	5 Gbps
USB 3.2 Gen 2×1	10 Gbps (SuperSpeed+)	1	10 Gbps
USB 3.2 Gen 1×2	5 Gbps (SuperSpeed)	2	10 Gbps
USB 3.2 Gen 2×2	10 Gbps (SuperSpeed+)	2	20 Gbps

Specification	Signaling Rate/Lane	Number of Lanes	Aggregate Bandwidth
USB4 Gen 2×2	10 Gbps	2	20 Gbps
USB4 Gen 3×2	20 Gbps	2	40 Gbps

What's New in USB4?

- **Up to 40Gbps Data Transfer Rate:** USB4 devices are required to support 20 Gbps (2.4 GB/sec). They can optionally support 40 Gbps (4.8 GB/sec) if they use the shorter 0.8 meter Gen 3 cable.
- **Multiple Data and Display Protocols:** USB4 supports USB 3.2, PCIe and DisplayPort 1.4a through a technique called protocol tunneling. DisplayPort and Thunderbolt 3 are also supported via Alt Mode.
- **Backward compatibility with USB 3.2, USB 2.0 and Thunderbolt 3:** USB4 maintains compatibility with previous versions of the USB specification and, thanks to its Thunderbolt 3 foundation, supports TB3 Alt Mode too.
- **Video and Data Bandwidth Optimization:** USB 3.2 allocated fixed bandwidth to data or video or, in DP Alt Mode, gave 100% to video. USB4 dynamically allocates bandwidth to video and data based on actual needs.
- **100 Watt Charging:** All USB4 devices support USB Power Delivery. When a device is connected to a USB4 port, USB PD negotiates a "contract" to deliver power, safely supplying up to 100 W (5A/20V).

- **Is USB 4 the Same as USB-C or Thunderbolt?**
- Now that you are familiar with the features and applications of USB 4, let's discuss how it differs from previous USB ports.
- Over USB-C or thunderbolt, USB 4 offers significant advancements, completely evolving the characteristics of regular USB. While USB 3.0, 3.1, and even USB 3.2 connections allowed for 5Gbps transfer speeds on more cheap devices, USB 4 will need a minimum of 10Gbps, and most devices will support the USB-IF-approved USB 4 20Gbps data rate.
- **USB 4 vs. USB-C, What's the Difference?**
- At first glance, the USB 4 and USB-C look similar, but the names refer to completely different technologies. A USB-C cable is a particular kind of cable, whereas USB 4.0 is a particular advancement in USB cable technology. The form has nothing to do with USB 4. It refers to the exact technology found inside a USB-C. Yes, your cable may support both USB 4 and USB-C. If that wasn't confusing enough, you can't determine whether a device is USB 3 or USB 4 simply by looking at it. Despite the fact that USB 3 is also available with the more recent USB-C architecture, some USB 3 connections still utilize the USB-A design.

- **USB 4 vs. Thunderbolt, Which Is Better?**
- If USB 4 sounds really good, it is, but it is not the only technology available. Thunderbolt 4 has some of the same benefits and is soon becoming another connection standard to be reckoned with. It also boasts a USB-C port with data transfer speeds of up to 40 Gbps.
- You can now connect up to 5 Thunderbolt devices to a single PC. It can also handle two monitors at the same time and has a higher minimum power need (15W for Thunderbolt vs. 7.5 for USB 4) Here's a comparison chart between USB 4 and Thunderbolt 4.

What's New in USB4?

- **What is Protocol Tunneling?**

  When devices talk to one another, they do so using a protocol. If both devices can speak and understand the same protocol, a connection can be established. Conceptually, Protocol Tunneling creates a "pipe" with one protocol and uses it to send data in another protocol. USB4 Protocol Tunneling creates a USB-C tunnel through which DisplayPort or PCIe data can be sent. USB4 Protocol Tunneling is similar to Alt Mode but doesn't require a DP or PCIe controller.

- **What is USB4 Fabric?**

  The word fabric is a metaphor used to describe a network of interconnecting nodes, such as switches. When illustrated, the crisscross pattern resembles woven cloth. The term has been adopted by the USB Implementers Forum (USB-IF) to describe how USB4's tunneling architecture dynamically manages the connection between USB4 routers so multiple protocols can simultaneously share the fabric's resources.

- **Will Apple Support USB4?**

  Apple's new MacBooks and Mac Mini will be the first to use Apple Silicon's own Arm-based processors, so there was some doubt surrounding support for USB4. However, Apple was able to implement support for both USB4 and Thunderbolt 3 in time for the product rollouts.

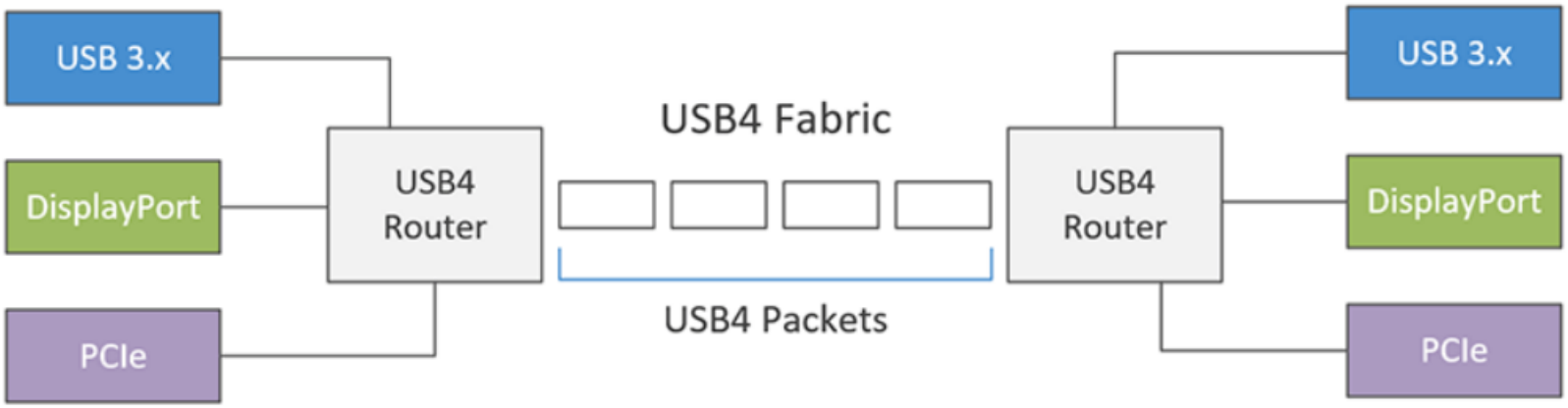
USB 3.x
DisplayPort
PCIe
USB4 Router
USB4 Fabric
USB4 Packets
USB4 Router
USB 3.x
DisplayPort
PCIe

Does USB-C support USB 2.0?

- It can but first let's clarify the difference between USB-C and USB 2.0. USB-C is a physical connector and, despite the name, it does not imply support for any particular version of the USB standard. In fact, a USB-C connector can be used to connect peripherals using other interface standards such as Thunderbolt 3.
- When buying USB-C cables, make sure to check the charging wattage and USB data rate supported. A charging cable supporting USB 2.0 can be longer than USB 3.x and USB4 cables but is limited to a 480 Mbps data transfer rate and will not support alt-modes.

Architecture

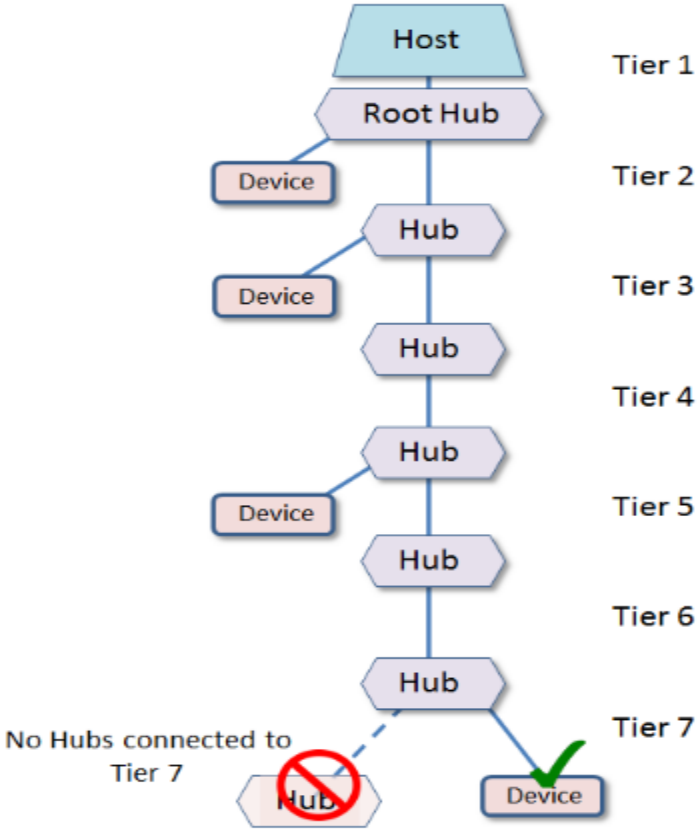

Architecture

- USB uses a tiered-star topology.
- At the center of the star is the *USB host*, which defines the USB, and only one of which is permitted per USB.
- The USB host resides inside the PC, and is implemented as a combination of hardware, firmware, and software.
- The USB host has one or more USB root hubs, which provide attachment points called *USB ports* to which *USB hubs* and *USB functions* may be connected. (Loosely speaking, a USB function is a peripheral such as a scanner, printer, mouse, digital camera, etc.)

Architecture

- USB hubs use two types of connections.
  - An *upstream connection* links the USB hub to another USB hub in the next-higher tier.
  - A *downstream connection* links the USB hub to another USB hub or to a USB function located in the next-lower tier.
- Each USB hub has one upstream port, and may have as many as seven downstream ports. Via daisy-chaining, USB allows connecting a maximum of 127 devices (USB hubs and USB functions) in a maximum of seven tiers.
- The limitation on the number of tiers is required to ensure that the most distant USB device can communicate within the maximum allowable propagation delay defined in the USB specification.

Architecture

- The length of any cable is limited to 5 metres. This limitation is expressed in the specification in terms of cable delays etc, but 5 metres can be taken as the practical consequence of the specification. This means that a device cannot be further than 30 metres from the PC, and even to achieve that will involve 5 external hubs, of which at least 2 will need to be self-powered.
- So the USB is intended as a bus for devices near to the PC. For applications requiring distance from the PC, another form of connection is needed, such as Ethernet.

Architecture

- All communications on this bus are initiated by the host.
- This means, for example, that there can be no communication directly between USB devices.
- A device cannot initiate a transfer, but must wait to be asked to transfer data by the host. The only exception to this is when a device has been put into 'suspend' (a low power state) by the host then the device can signal a 'remote wakeup'.

Architecture

- The USB is controlled by a host; there can be multiple peripherals but only one host per bus. The host can be taken as master and peripheral as slaves, whereby the former is responsible for managing the connection, transactions, and scheduling bandwidth.
- The USB system uses 7-bit addressing; this means it can support up to 127 devices at once.

The Host controllers

- As we know, the host controller and the root hub are part of the computer hardware. The interfacing between the programmer and this host controller is done by a device called Host Controller Device (HCD), which is defined by the hardware implementer.
- But remember, USB specification does not specify any HCD interfaces. The USB defines the format of data transfer through the port, but not the system by which the USB hardware communicates with the computer it sits in.

Types of Host Controller

– OHCI (Open Host Controller Interface)

Compaq, Microsoft and National Semiconductors cooperated to produce this standard host controller specification for USB 1.0 and USB 1.1. It is a more hardware oriented version than UHCI. Low speed and full speed.

– UHCI (Universal Host Controller Interface)

Intel's more software-oriented version of a controller for USB 1.0 and USB 1.1. Requires a license from Intel. Low speed and full speed.

– EHCI (Extended Host Controller Interface)

When USB 2.0 appeared with its new high speed functionality, the USB-IF insisted on there being a single host controller specification, to keep device development costs down. The EHCI handles high speed transfers, and hands off low and full speed transfers to either OHCI or UHCI companion controllers.

– VHCI (Virtual Host Controller Interface)

refers to a virtual controller that may export virtual USB devices not backed by physical devices. For instance, on Linux, VHCI controllers are used to expose USB devices from other machines, attached using the USB/IP protocol.

– USB4 Host Interface

It makes operating system to manage USB4 Host Route for USB, DisplayPort, PCI Express, Thunderbolt or Host-to-Host Communication.

Endpoints

- In USB, the information flows between host and device. The endpoints are source or sink of information in a communication channel. These are blocks of memory in a controller chip containing buffers for transmission and reception.
- The two endpoints can have same endpoint number but different directions. When the device is plugged in, only the default endpoint 0 is accessible. This endpoint receives control and status request from the host during enumeration process.
- The other endpoints are declared as per requirement after configuration of the device.

Endpoints

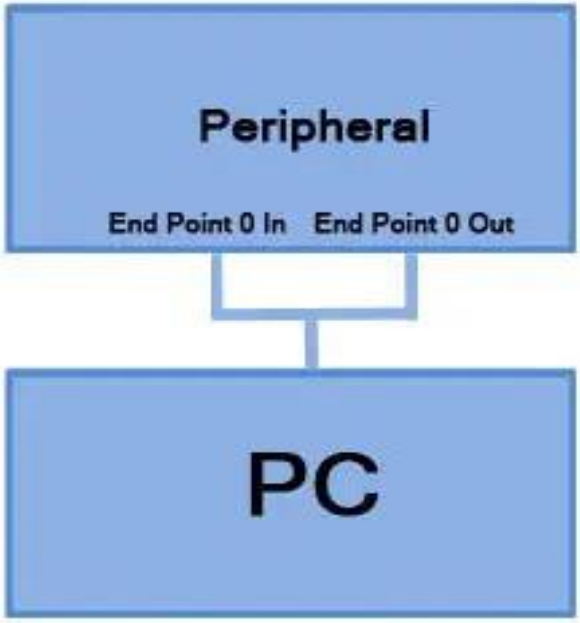

Default Endpoints

Pipes

- A pipe is a logical data connection between host controller's software and device endpoint. The information is exchanged through this pipe. It is created during enumeration process. When the device is unplugged, unneeded pipes are removed.
- There are two types of pipes:
  - **Message pipes:** These are bi-directional pipes which follow defined packet format. They are controlled by host and only support control transfer.
  - **Stream pipes:** These are unidirectional pipes which don't follow any specific data format. They can be controlled by host or device (peripheral) and support bulk, isochronous and interrupt types of transfer.
- The **Default Control pipe** is a special type of message pipe which is bidirectional and supports control transfer type. It uses endpoint 0-IN and endpoint 0-OUT. This pipe can be accessed when a device is plugged in.

Pipes

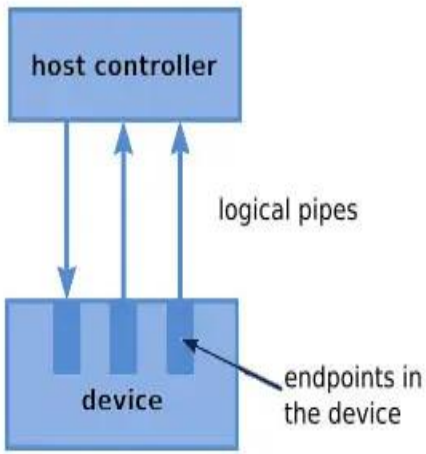
host controller
logical pipes
device
endpoints in
the device

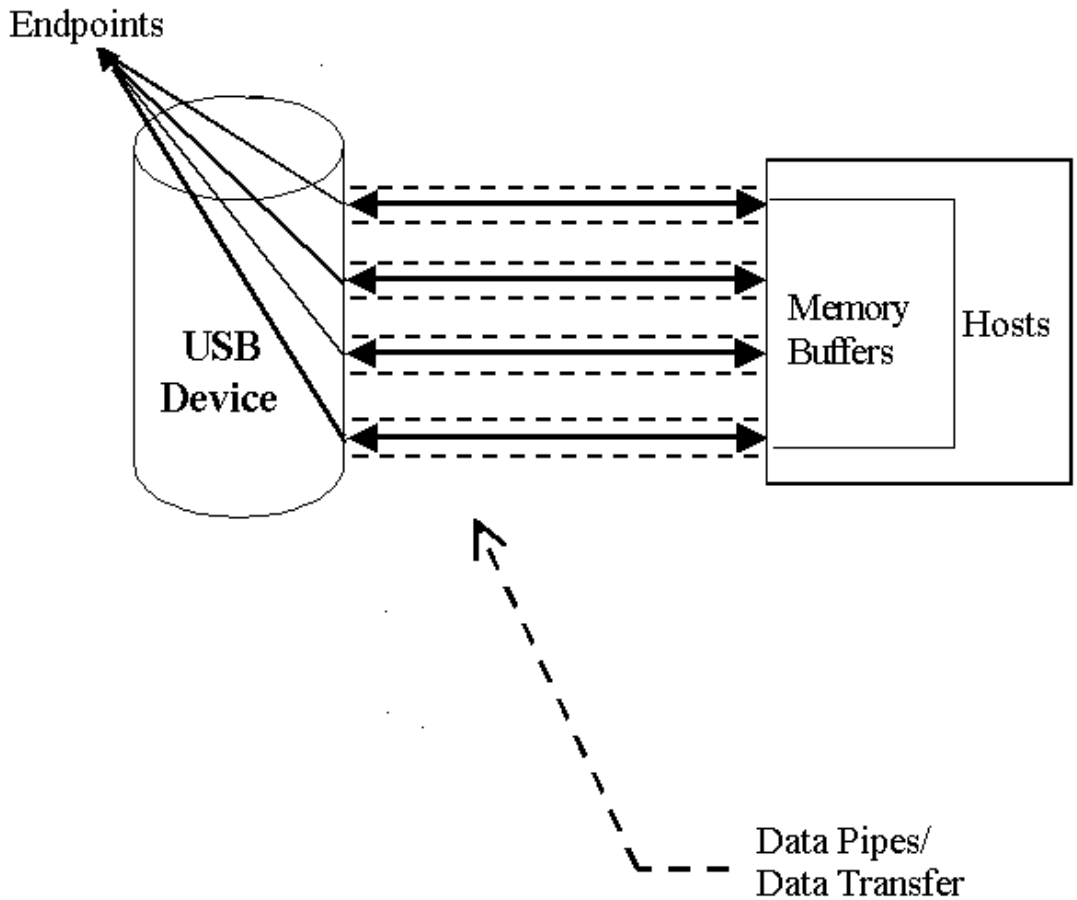
Endpoints
USB
Device
Memory
Buffers
Hosts
Data Pipes/
Data Transfer

Transfer Types

- There are four types of transfer modes or types which can be used for communication:

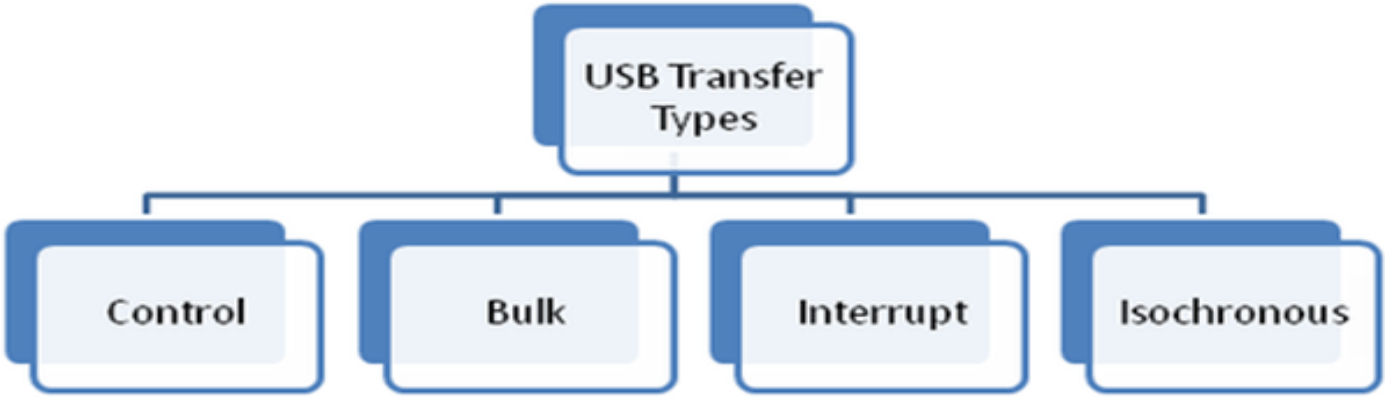

Transfer Types

- **Control Transfer:** This transfer type is used to transfer the control information while identifying and configuring the device. Control transfers exchange configuration, setup and command information between the device and the host.
  - The host can also send commands or query parameters with control packets.
- **Bulk Transfer:** In this transfer type, large amount of data is moved and time is not a critical factor here. It is used by device like printers & scanners, which receives data in one big packet.
  - Bulk transfers are fillers, claiming unused USB bandwidth when nothing more important is going on. The error correction protects these packets.

Transfer Types

- **Interrupt Transfer:** This type of transfer is for small data transmission with immediate attention.
  - It is used by devices to request servicing from the PC/host. Devices like a mouse or a keyboard comes in this category. Error checking validates the data.
- **Isochronous Transfer:** It is a transfer in which time is a critical factor. The transfer has to be completed in a given time. It is used by time critical, streaming device such as speakers and video cameras.
  - It is time sensitive information so, within limitations, it has guaranteed access to the USB bus.
  - Data streams between the device and the host in real-time, and so there will not be any error correction.

Transaction

- A single transaction contains transmission of up to three packets. These packets are:
  - **Token Packet:** This packet is always sent by Host (Header defining what it expects to follow)
  - **Data Packet:** This packet can be sent by Host or Device. (Containing the payload)
  - **Handshake / Status Packet:** This packet provides **success/failure information** for the data packet received. If Host transmits the data packet, the device sends the handshake packet and vice versa. (Used to acknowledge transactions and to provide a means of error correction)

USB packets & formats (1)

- All USB data is sent serially, of course, and least significant bit (LSB) first.
- USB data transfer is essentially in the form of packets of data, sent back and forth between the host and peripheral devices.
- The host initiates all transactions.
  - The first packet, also called a token is generated by the host to describe what is to follow and whether the data transfer will be a read or write and what the device's address and designated endpoint is.
  - The next packet is generally a data packet carrying the content information and
  - is followed by a handshaking packet, reporting if the data or token was received successfully, or if the endpoint is stalled or not available to accept data.

USB packets & formats (2)

- USB packets may consist of the following fields:
  - Sync field: All the packets start with this sync field. The sync field is 8 bits long at low and full speed or 32 bits long for high speed and is used to synchronize the clock of the receiver with that of the transmitter. The last two bits indicate where the PID fields starts.
  - PID field: This field (Packet ID) is used to identify the type of packet that is being sent. The PID is actually 4 bits; the byte consists of the 4-bit PID followed by its bit-wise complement, making an 8-bit PID in total. This redundancy helps detect errors.
  - ADDR field: The address field specifies which device the packet is designated for. Being 7 bits in length allows for 127 devices to be supported.
  - ENDP field: This field is made up of 4 bits, allowing 16 possible endpoints. Low speed devices however can only have 2 additional endpoints on top of the default pipe.
  - CRC field: Cyclic Redundancy Checks are performed on the data within the packet payload. All token packets have a 5-bit CRC while data packets have a 16-bit CRC.
  - EOP field: This indicates End of packet. Signaled by a Single Ended Zero (SE0) for approximately 2 bit times followed by a J for 1 bit time.

Handshaking

- Handshaking is a mechanism to check the success/failure of a request or to check the delivery of a packet.
- It is done to avoid loss of packets and to ensure successful transmission.
- Terms related to handshaking:
  - **ACK** – acknowledgment for data receive (success)
  - **NAK** – negative acknowledgment means no data
  - **STALL** – request not supported or endpoint halted
  - **NYET** – not yet. A case can be when device is busy and not ready for next data packet
  - **ERR** – split transaction error
  - **No response**

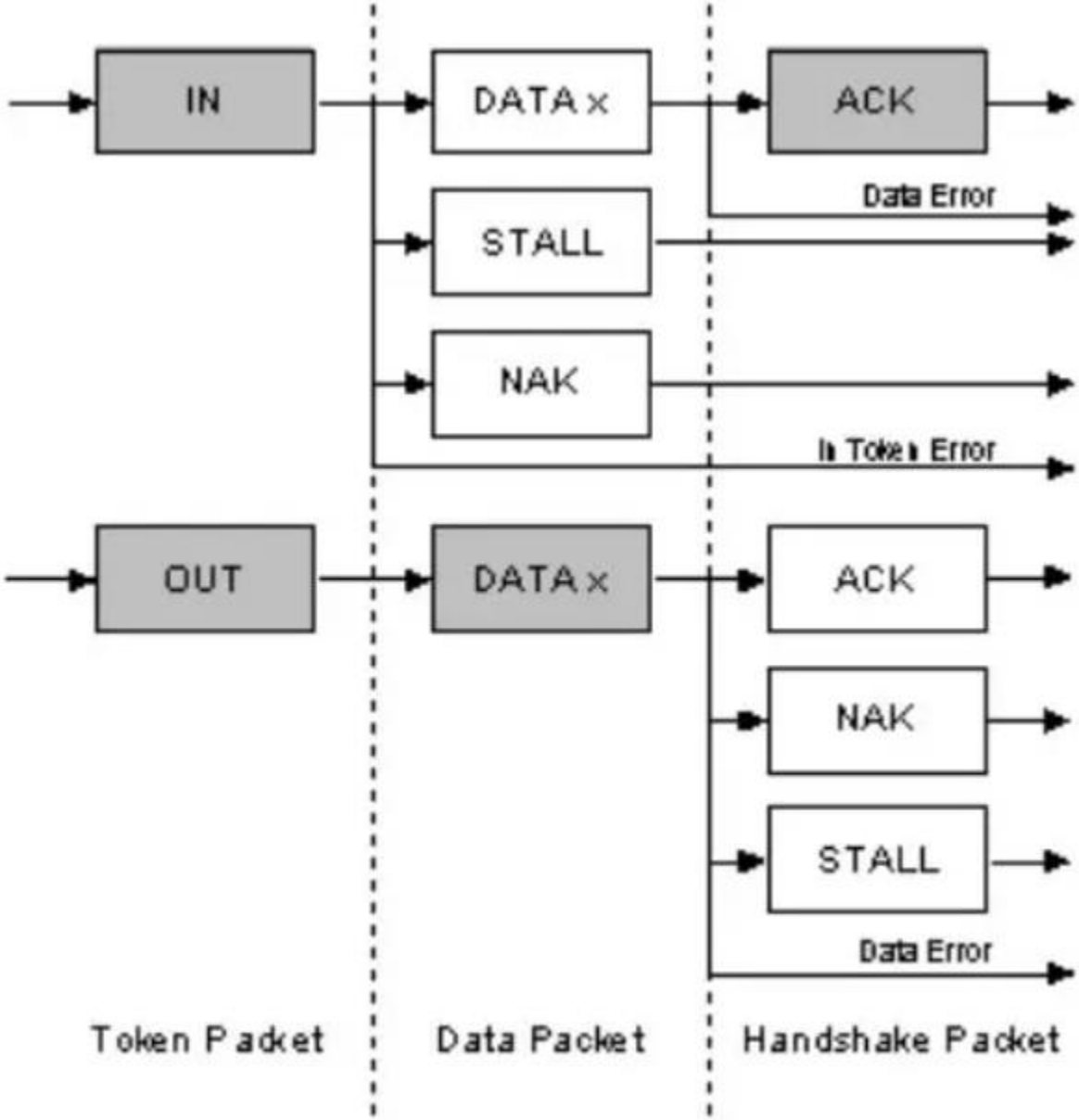

USB Transactions and Handshaking

USB Device States

- **Attached State:** occurs when the device is attached to the Host.
- **Powered State:** After the device is attached, the Host provides power to the device if it does not have its own power supply. The device should not draw more than 100 mA in this state.
- **Default State:** This state occurs when the device is reset and has not been assigned a unique address. In this state the device uses default control pipe for communication and default address 0.
- **Addressed State:** The USB device enters this state after it gets a unique address which is used for future communications.
- **Configured:** When the Host obtains required information from the device, it loads the appropriate driver for the device. The host configures the device by selecting a configuration. The device is now ready to do the operations it was meant for.
- **Suspended State:** The USB device enters the suspended state when the bus remains idle for more than 3mS. In this state, the device must not draw more than 500uA of current.

Device Classes

- USB defines class codes used to identify a device's functionality and to load a device driver based on that functionality. This enables a device driver writer to support devices from different manufacturers that comply with a given class code.
- There are two places on a device where class code information can be placed. One place is in the Device Descriptor, and the other is in Interface Descriptors.
- Some defined class codes are allowed to be used only in a Device Descriptor, others can be used in both Device and Interface Descriptors, and some can only be used in Interface Descriptors.

Device Classes

- **Human Interface Device (HID):** This class is generally used by devices which use Interrupt Transfer for data communication. Examples are keyboard, mouse or joystick.
- **Mass Storage:** Devices which need to transfer a large amount of data through Bulk Transfer implements this class. Examples are USB flash drive, memory card reader or external hard disk.
- **Audio:** This class is implemented by audio devices like microphone, speaker, external sound card etc. The device uses Isochronous Transfer for data communication.
- **USB Hub:** It is used by USB hubs to expand the number of ports.
- **Image:** Used by a device like a webcam or a scanner.
- **Printer:** Used by Laser printer, inkjet printer or CNC machines
- **Wireless:** Used by the external adapter for wireless communication. Example – Bluetooth, 802.11

Device Classes

Common USB Device Classes			
Class	Usage	Description	Examples
01h	Interface	Audio	Speaker, microphone, sound card
03h	Interface	Human Interface Device	Keyboard, mouse, joystick
07h	Interface	Printer	Laser printer, inkjet printer, CNC machine
08h	Interface	Mass storage	USB flash drive, memory card reader, digital audio player, digital camera, external
09h	Device	USB hub	Full bandwidth hub
0Bh	Interface	Smart Card	USB smart card reader
0Dh	Interface	Content Security	Finger Print Reader
0Eh	Interface	Video	Webcam

USB Electrical Signaling

- The serial data is sent along the USB in differential or push-pull mode, with opposite polarities on the two signal lines.
- This improves the signal-to-noise ratio by doubling the effective signal amplitude and also allowing the cancellation of any common-mode noise induced into the cable.
- The data is sent in non-return-to-zero (NRTZ) format. In order to synchronize the host and receiver clocks, Sync field is used.

USB Electrical Signaling

- To ensure a minimum density of signal transitions, USB uses bit stuffing. I.e.: an extra 0 bit is inserted into the data stream after any appearance of six consecutive 1 bits. Seven consecutive 1 bits is always considered as an error.
- The low speed/full speed USB bus (twisted pair data cable) has characteristic impedance of 90 ohms +/- 15%.

USB Electrical Signaling

- The data cable signal lines are labeled as D+ and D-. Transmitted signal levels are as follows.
  - 1. 0.0V to 0.3V for low level and 2.8V to 3.6V for high level in Full Speed (FS) and Low Speed (LS) modes
  - -10mV to 10 mV for low level and 360mV to 440 mV for high level in High Speed (HS) mode.
- In FS mode the cable wires are not terminated, but the HS mode has termination of 45 ohms to ground, or 90 ohms differential to match the data cable impedance.

USB Electrical Signaling

- As we already discussed, the USB connection is always between a host / hub at the "A" connector end, and a device or hub's upstream port at the other end.
- The host includes 15 kO pull-down resistors on each data line. When no device is connected, this pulls both data lines low into the so-called "single-ended zero" state (SE0), and indicates a reset or disconnected connection.
- A USB device pulls one of the data lines high with a 1.5kO resistor. This overpowers one of the pull-down resistors in the host and leaves the data lines in an idle state called "J".
- The choice of data line indicates a device's speed support; full-speed devices pull D+ high, while low-speed devices pull D- high. In fact the data is transmitted by toggling the data lines between the J state and the opposite K state.

USB Electrical Signaling

- A USB bus is reset using a prolonged (10 to 20 milliseconds) SE0 signal. USB 2.0 devices use a special protocol during reset, called "chirping", to negotiate the High-Speed mode with the host/hub. A device that is HS capable first connects as an FS device (D+ pulled high), but upon receiving a USB RESET (both D+ and D- driven LOW by host for 10 to 20 mS) it pulls the D- line high. If the host/hub is also HS capable, it chirps (returns alternating J and K states on D- and D+ lines) letting the device know that the hub will operate at High Speed.

Enumeration

- Enumerating is making peripheral device recognizable at host end. For making enumeration successful some steps have to be followed:
- **Writing firmware code for the controller chip:** This firmware will be responsible for sending device description, decoding the packets and responding to the host.
- **A device driver needs to be installed on the host:** For windows, an **INF** is needed which contains the information about the device. Sometimes USB device itself contains drivers for the host.
- After successful enumeration, the device will be known to the host and an application will be needed to make use of the USB communication. The application uses Operating System's **API** (for e.g. Windows API). The application can transmit or receive data by using Buffers.

How do they communicate? (1)

- When a USB peripheral device is first attached to the network, a process called enumeration process gets started.
- The enumeration starts by sending a reset signal to the newly connected USB device. The speed of the USB device is determined during the reset signaling.
- After reset, the host reads the USB device's information, and then the device is assigned a unique 7-bit address.
- If the device is supported by the host, the device drivers needed for communicating with the device are loaded and the device is set to a configured state.
- Once a hub detects a new peripheral (or even the removal of one), it actually reports the new information about the peripheral to the host, and enables communications with it.
- If the USB host is restarted, the enumeration process is repeated for all connected devices.
  - In other words, the enumeration process is initiated both when the host is powered up and a device connected or removed from the network.

How do they communicate? (2)

- Technically speaking, the USB communications takes place between the host and endpoints located in the peripherals.
- An endpoint is a uniquely addressable portion of the peripheral that is the source or receiver of data.
- Four bits define the device's endpoint address; codes also indicate transfer direction and whether the transaction is a "control" transfer.
- Endpoint 0 is reserved for control transfers, leaving up to 15 bi-directional destinations or sources of data within each device.
- All devices must support endpoint zero. Because this is the endpoint, which receives all of the devices control, and status requests during enumeration and throughout the duration while the device is operational on the bus.
- All the transfers in USB occur through virtual pipes that connect the peripheral's endpoints with the host.

How do they communicate? (3)

- When establishing communications with the peripheral, each endpoint returns a descriptor, a data structure that tells the host about the endpoint's configuration and expectations. Given this data, the host establishes connections to the endpoints through virtual pipes.
- Though physically configured as a tiered star, logically (to the application code) a direct connection exists between the host and each device.
- The host controller polls the bus for traffic, usually in a round-robin fashion, so no USB device can transfer any data on the bus without an explicit request from the host controller.
- USB can support four data transfer types or transfer mode, which are listed below and described before:

  -Control
  -Isochronous
  -Bulk
  -Interrupt

How do they communicate? (4)

- As devices are enumerated, the host is keeping track of the total bandwidth that all of the isochronous and interrupt devices are requesting.
- They can consume up to 90 percent of the 480 Mbps of bandwidth that is available. After 90 percent is used up, the host denies access to any other isochronous or interrupt devices.
- Control packets and packets for bulk transfers use any bandwidth left over (at least 10 percent).
- The USB divides the available bandwidth into frames, and the host controls the frames.
  - Frames contain 1,500 bytes, and a new frame starts every millisecond. During a frame, isochronous and interrupt devices get a slot so they are guaranteed the bandwidth they need. Bulk and control transfers use whatever space is left.

USB Protocol and Packet Types

- https://www.engineersgarage.com/usb-protocol-types-of-usb-packets-and-usb-transfers-part-2-6/

USB Descriptors

- https://www.beyondlogic.org/usbnutshell/usb5.shtml

The End